UNISET

NUNS 4 & 7 TOP™ DESK SYSTEM

Providing Studio Set Design and
Manufacturing Solutions Since 1976

See More Products by UNISET by visiting **www.unisetcorp.com**
or call us at (585) 544-3820

NUNS™ DESK: TOTAL ADAPTABILITY

- Affordable dynamic talent table system
- Provides multiple show options for show identities with different desktop configurations
- Maximize creative use of your studio space
- Change the desktop configurations with no tools
- Durable laminate construction for years of use

4 TOP SYSTEM INCLUDES:

(4) Reversible 2 sided tops for 1 to 5 talent
(1) U shaped news base
(2) Quarter round front modules
(1) Curved inside/out panel
(2) Flat front panel
(3) Storage cart

** Tops are not interchangeable
(Comes with tops #A #B #C #D)

$4,995

7 TOP SYSTEM INCLUDES:

(7) Reversible 2 sided tops for 1 to 5 talent
(1) Right angle support
(1) U shaped news base
(2) Quarter round front modules
(1) C shaped front module
(1) Curved inside/out panel
(2) Flat front panel
(2) Table fronts
(1) Storage cart

$5,995

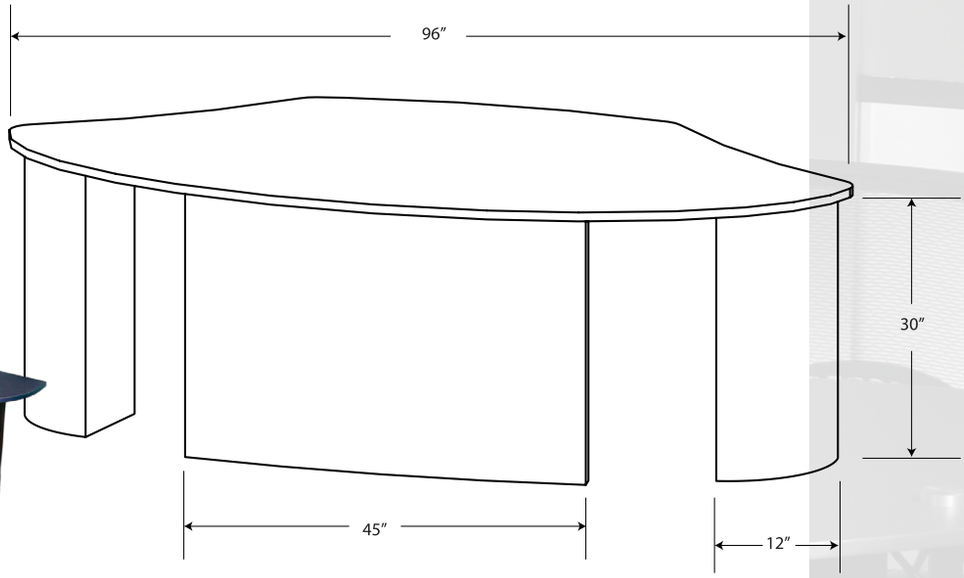

Tops (A,B C &D) offered with standard 4 Top System

All 7 Top configurations included in standard 7 Top System

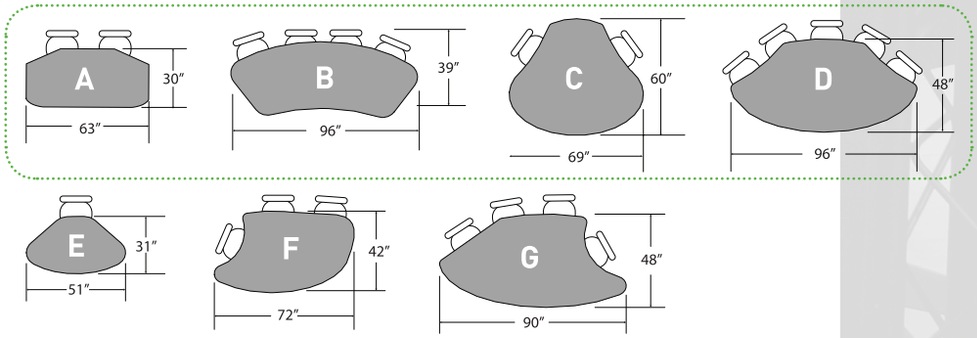

UNISET

Call us Today!

All of our products are USA made | Small Business Certified
All products come with 2-year manufacturer's warranty
www.unisetcorp.com